For standard Power supply : install (a) components, do not install (b) components
For optional Power supply : install (b) components, do not install (a) components

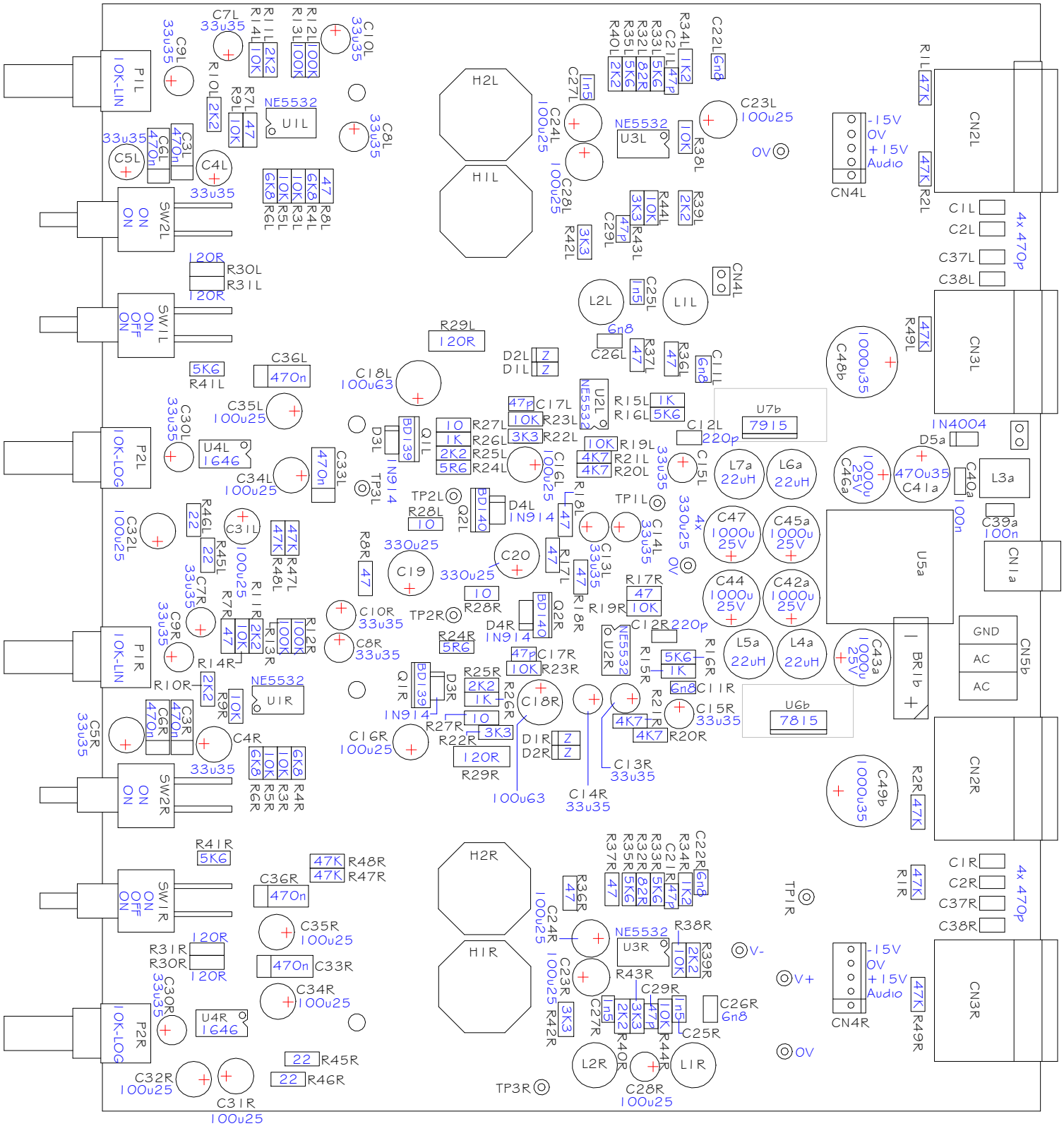

SOUND SKULPTOR	Title STS Component Layout page 1/1	Sch Rev	1.5
	www.soundskulptor.com	PCB Rev	1.4
	Copyright ©2007-today Soundskulptor	Last modified	28/02/13

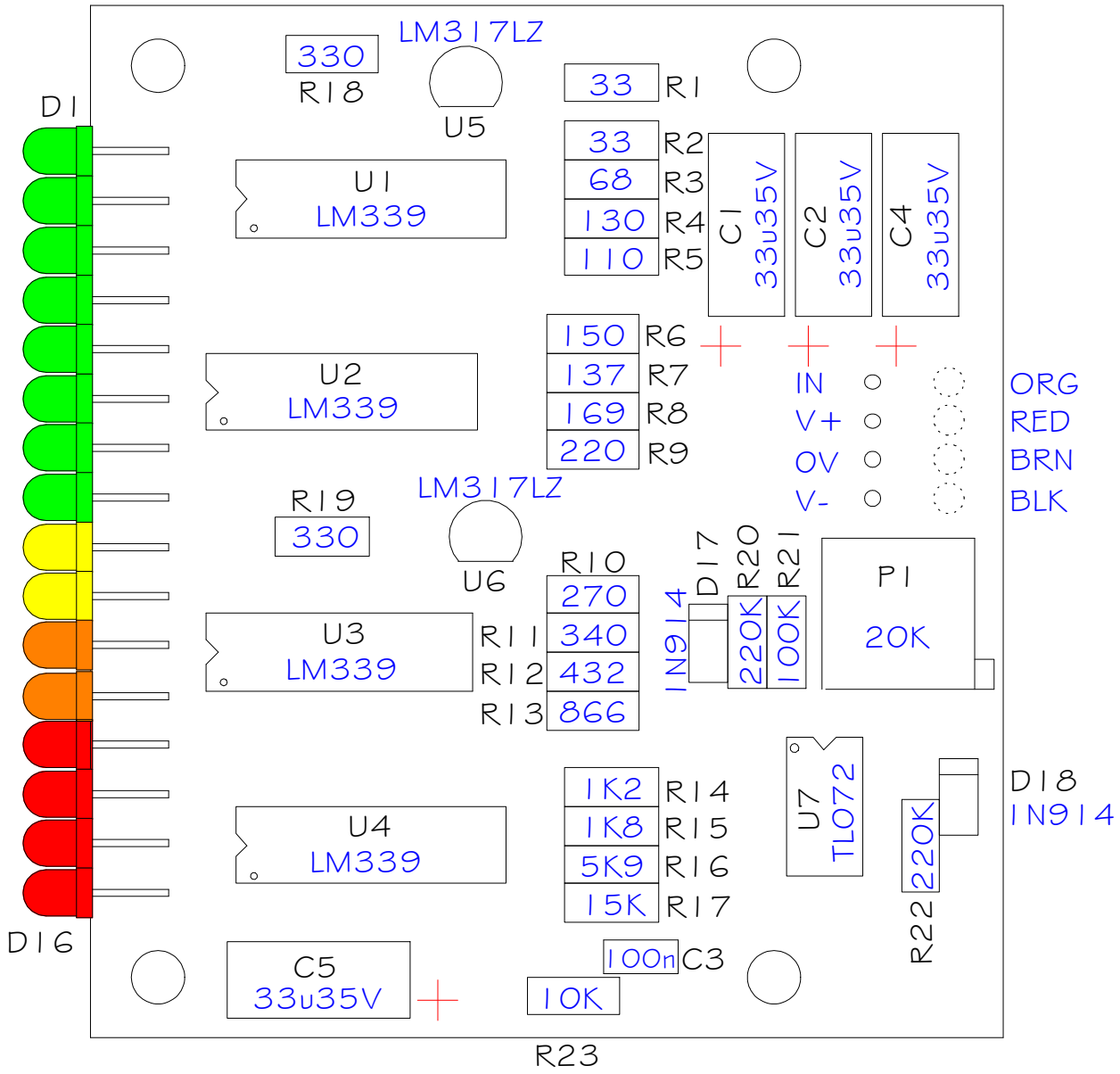

SOUND SKULPTOR	Title VuM16 Peak meter	Sch Rev	1.3
	www.soundskulptor.com	PCB Rev	1.3
	Copyright ©2007-2010 Soundskulptor	Last modified	23/03/10